DocuSign Envelope ID: 6AF55019-F730-45D0-ADF0-CC26DA050E81

PAVEMENT SCHEDULE	
C1	3″ S9.5B
C2	VAR. S9.5B
D1	4″ I19.0B
D2	VAR. I19.0B
E1	4″ B25.0B
E2	VAR. B25.0B
R1	2′-6″ C & G
R2	7″ CMM
T	EARTH MATERIAL
U	EX. PAVEMENT
V1	VAR. MILLING
V2	1.5″ MILLING
W	WEDGING

NOTE: PAVEMENT EDGE SLOPES ARE 1:1 UNLESS SHOWN OTHERWISE.

REVISIONS

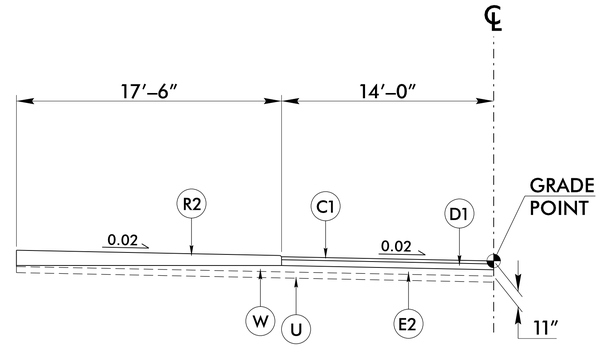

TYPICAL SECTION NO. 3

ROUND-ABOUT

USE TYPICAL SECTION NO. 3

-RBT- STA 10+00.00 TO -RBT- STA 11+97.92

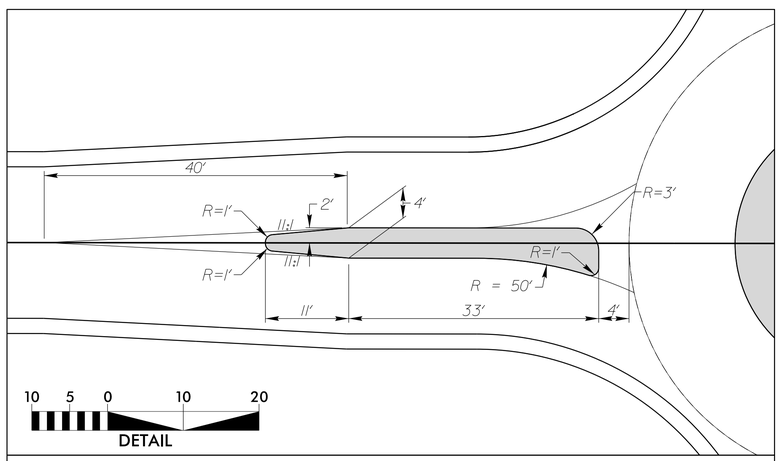

SKETCH SHOWING TYPICAL DIMENSIONS OF THE MONOLITHIC CONCRETE ISLANDS

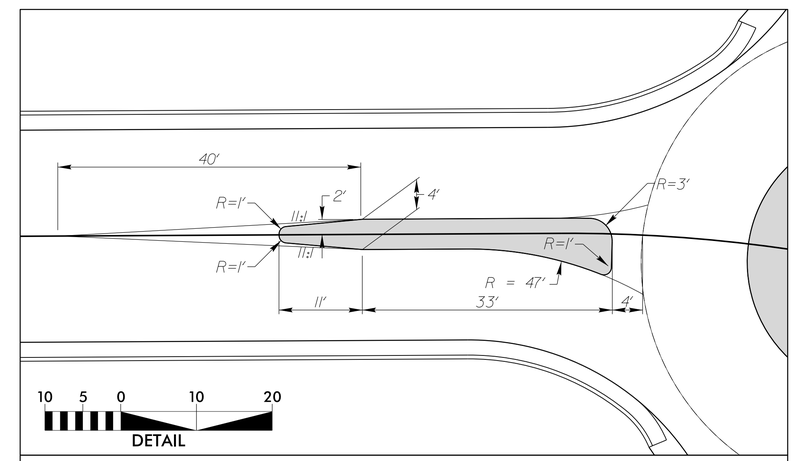

SKETCH SHOWING DIMENSIONS OF MONOLITHIC CONCRETE ISLAND ON KENAN ROAD

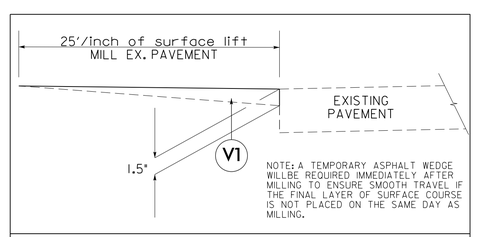

INCIDENTAL MILLING PAVEMENT KEY-IN DETAIL (TIE-IN)

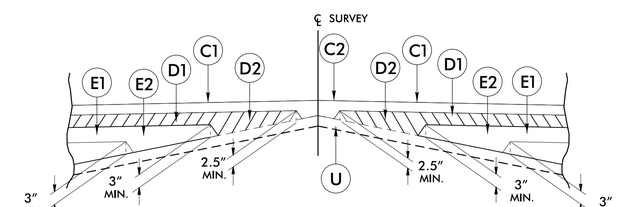

Detail Showing Method of Wedging

PROJECT REFERENCE NO.	SHEET NO.
SS-4905BM	2A-2
R/W SHEET NO.	
ROADWAY DESIGN ENGINEER	PAVEMENT ENGINEER

5/15/2015

NORTH CAROLINA PROFESSIONAL SEAL 034371 ENGINEER BRANDON M. JOHNSON

DocuSigned by: Brandon M. Johnson
6A29A2BE0C9845E...

Prepared in the Office of: SUMMIT DESIGN AND ENGINEERING SERVICES

NC FIRM LICENSE No: P-0339
504 Meadowlands Drive
Hillsborough, NC 27278
(919) 732-3883
(919) 732-6676 (FAX)

15-MAY-2015 09:20
R8_Ray_TYP2A.dgn
spencer.merritt